316 CAV BDE
Organization

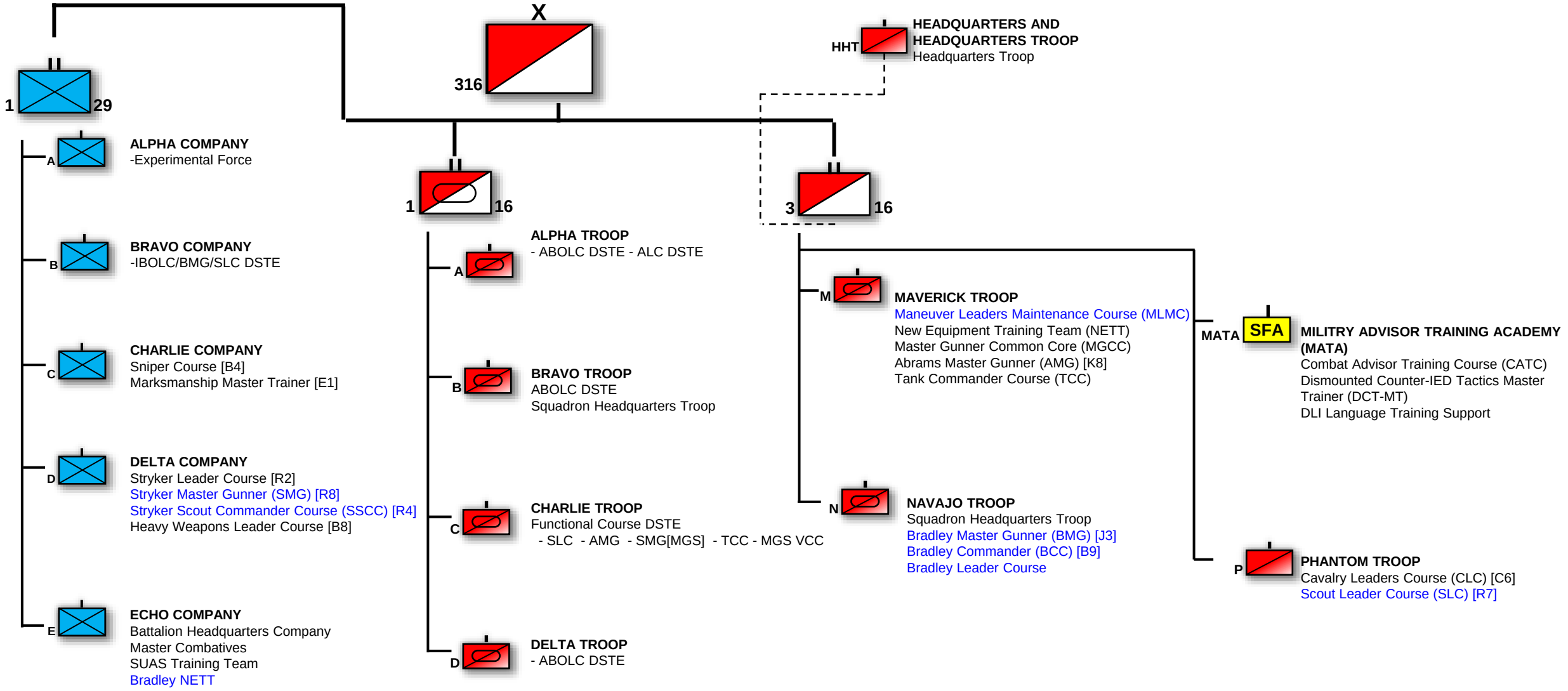

As of 30JUN23 POC: CPT Hopkins, George 316 BDE S4 706-545-4446